Installation and Operation Instructions

High Voltage Battery System

GB-L

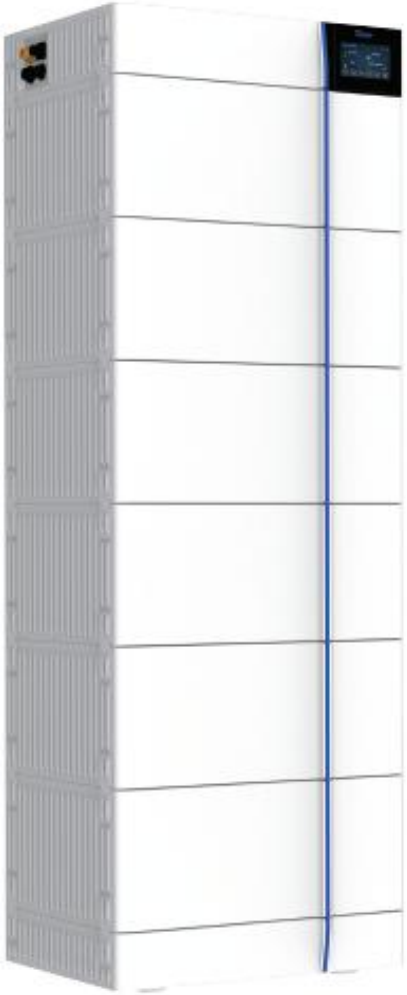

Version：V1.1

CONTENT

1. IMPORTANT INFORMATION IN THE MANUAL 3

1.1 Scope 3

1.2 Description of GB-L 3

1.3 Meaning of Symbols 3

1.4 General Safety Information 5

1.5 Disclaimer 5

1.6 Proper Use 6

2. SAFETY 7

2.1 Safety Rules 7

2.2 Safety information 7

3. SCOPE OF DELIVERY 8

3.1. GB-LBS and GB-L Base package 8

3.2. GB-LM4.0 battery package 9

4. BATTERY SYSTEM INTRODUCTION 10

4.1 Operating Panel 11

4.2 Number of battery modules supported by GB-L 12

5.INSTALLATION 12

5.1. Installation Place Requirement 12

5.2 Tools Requirements: 13

5.3 Installation steps 14

5.3.1 Product Installation Steps 16

5.3.2 Selection of installation sites 16

5.4 Definition of Interface 16

5.5 Batteries in parallel 17

5.5.1 Selection of installation sites 16

5.5.2 Multiple of installation sites 16

6. COMMISSIONING 19

6.1 Switch on the Battery System 19

6.2 Light meaning 20

6.3. Switch off the Battery System 20

7. SAFETY DESIGN 21

7.1 Procedure for configuring battery packs 21

7.1.1 Basic Parameters 22

7.1.2 Fault Indication 22

8. MAINTENANCE AND STORAGE 23

8.1 Cleaning 23

8.2 Storage 23

9. DISPOSAL 24

1. IMPORTANT INFORMATION IN THE MANUAL

1.1 Scope

This installation and operation manual applies to the stackable battery energy storage system. Please carefully read this manual guide installation, preliminary debugging, and maintenance of GB-L. Installation, preliminary debugging, and maintenance must be carried out by qualified and authorized engineer. Please keep this installation and operation manual and other applicable documents near the battery energy storage system, so that all engineer involved in installation or maintenance can access this installation and operation manual at any time.

This installation and operation manual only applies to countries meeting the certification requirements. Please observe the applicable local laws, regulations, and standards. Standards and legal provisions of other countries may be inconsistent with the provisions and specifications in this manual.
Content may be updated or modified periodically due to product update iterations. The manual is subject to change without prior notice.
The latest manual can be acquired via service-ess@deye.com.cn (www.deyeess.com).

1.2 Description of GB-L

Model	Composition
GB-L	GB-L 8 / 204.8Vdc / 8.18kWh
	GB-L 12 / 307.2Vdc / 12.27kWh
	GB-L 16 / 409.6Vdc / 16.36kWh
	GB-L 20 / 512Vdc / 20.04kWh
	GB-L 24 / 614.4Vdc / 24.56kWh

1.3 Meaning of Symbols

This manual contains the following types of warnings:

Danger! It may cause an electric shock.

Even when the equipment is disconnected from the grid, the voltage-free state will have a time lag.

Danger! If the instructions are not observed, death or severe injury may occur.

Warning! If the instructions are not observed, a loss may occur.

Attention! This symbol represents information on the device use.

The following types of warning, prohibition, and mandatory symbols is important.

Attention! The risk of chemical burns

If the battery is damaged or fails, it may lead to electrolyte leakage, which in turn causes the formation of a small amount of hydrofluoric acid, among other effects. Contact with these liquids can cause chemical burns.

• Do not subject the battery module to severe impact.

• Do not open, disassemble or mechanically change the battery module.

• In case of contact with an electrolyte, wash the affected area with clean water immediately and seek medical advice promptly.

Attention! The risk of explosion

Incorrect operation or fire may cause the lithium-ion battery unit to ignite or explode, leading to serious injury.

• Do not install or operate the battery module in explosive or high-humidity areas.

• Store the battery module in a dry place within the temperature range specified in the datasheet.

• Do not open, drill through or drop the battery cell or module.

• Do not expose the battery cell or module to high temperatures.

• Do not throw the battery cell or module into the fire.

• If there is a fire from the battery, please use the CO2 extinguisher. If there is a fire near the battery, please use a dry powder extinguisher.

• Do not use defective or damaged battery modules.

Caution! Hot surface

• If a malfunction occurs, the parts will become very hot, and touching them may cause serious injury.

• If the energy storage system is defective, please shut it down immediately.

• If the fault or defect becomes obvious, special care should be taken when handling the equipment.

No open fire!

It is prohibited to handle open flames and ignition sources near the energy storage system.

Do not insert any objects into the opening in the housing of the energy storage system!

No objects, such as screwdrivers, may be inserted through openings in the casing of the storage system.

Wear safety goggles! Wear safety goggles when working on the equipment.

Follow the manual!

When working and operating the equipment, the installation and operation manual provisions must be observed.

1.4 General Safety Information

Danger! Failure to comply with the safety information can lead to life-threatening situations.

1. Improper use can cause death. Operators of GB-L must read this manual and observe all safety information.

2. Operators of GB-L must comply with the specifications in this manual.

3. This manual cannot describe all conceivable situations. For this reason, applicable standards and relevant occupational health and safety regulations are always given priority.

4. In addition, the installation may involve residual hazards in the following circumstances:

• Incorrect installation.

• The installation is carried out by personnel who did not receive relevant training or guidance.

• Failure to observe the warnings and safety information in this manual.

If there are any questions, please contact Deye ESS after service.

1.5 Disclaimer

DEYE ESS TECHNOLOGY CO., LTD shall not be liable for personal injury, property loss, product damage and subsequent losses under the following circumstances.

• Failure to comply with the provisions of this manual.

• Incorrect use of this product.

• Unauthorized or unqualified personnel repair the product, disassembly the rack and perform other operations.

• Use of unapproved spare parts.

• Unauthorized modifications or technical changes to the product.

1.6 Proper Use

• The battery energy storage system can only be installed and operated under the roof or indoor. The working environment temperature range of GB-L is -20℃~ 60℃, and the maximum humidity is 90%. The battery module shall not be exposed to the sun or placed directly beside the heat source.

• The battery module shall not be exposed to a corrosive environment.

• When installing the battery energy storage system, ensure that it stands on a sufficiently dry and flat surface with sufficient bearing capacity. Without the manufacturer's written approval, the installation site's altitude shall not be higher than 2,000 meters. The rated out put power of the battery will decreases with the altitude.

• In areas where flooding may occur, care must be taken to ensure that the battery module is installed at a suitable height to prevent contact with water.

• The battery energy storage system must be installed in a fireproof room. This room must have no fire source and must be equipped with an independent fire alarm device, which complies with local applicable regulations and standards. Similar fire-proof requirements apply to other openings in the room (such as windows).

Compliance with the specifications in this manual is also part of proper use.

1.7 Requirements for Installation Personnel

All work shall comply with local applicable regulations and standards.

The installation of GB-L can only be completed by electricians with all following qualifications:

• Trained in dealing with hazards and risks associated with the installation and operation of electrical equipment, systems, and batteries.

• Trained on installation and debugging of electrical equipment.

• Understanding and complying with the technical connection conditions, standards, guidelines, regulations, and laws applicable.

• Knowledge of handling lithium-ion batteries (transportation, storage, disposal, hazard source).

• Understanding and complying with this document and other applicable documents.

2. SAFETY

2.1 Safety Rules

To avoid property damage and personal injury, the following rules shall be followed when working on the hazardous live parts of the battery energy storage system:

• It is available for use.

• Ensure that it will not restart.

• Make sure there is no voltage.

• Grounding protection and short circuit protection

• Cover or shield adjacent live parts.

2.2 Safety information

Part damage or short circuit may cause electric shock and death. A short circuit can be caused by connecting battery terminals, resulting in current flow. This type of short circuit shall be avoided under any circumstances. For this reason, follow these instructions:

• Use insulated tools and gloves.

• Do not put any tools or metal parts on the battery module or high-voltage control box.

• When operating the battery, be sure to remove watches, rings, and other metal objects.

• Do not install or operate this system in explosive or high-humidity areas.

• When working on the energy storage system, first turn off the charging controller, then the battery, and ensure that they are not turned on again.

Improper use of the battery energy storage system can lead to death. The use of the battery energy storage system beyond its intended use is not allowed, because it may cause great danger.

Improper handling of the battery energy storage system can cause life-threatening risks, serious injury or even death.

STOP **Warning!** Improper use can cause damage to the battery cell.

• Do not expose the battery module to rain or soak it in liquid.

• Do not expose the battery module to a corrosive environment (such as ammonia and salt).

• The battery energy storage system shall be debugged no later than six months after delivery.

• Battery needs to be recharged within 48 hours after fully discharged.

3. SCOPE OF DELIVERY

3.1. GB-LBS and GB-L Base package

① GB-LBS x1(high voltage control box)

② GB-L Base x1

③ ECOM Cable2.0 x1

④ PE Cable2.0 x1

⑤ EP Cable2.0 x1

⑥ EN Cable2.0 x1

⑦ Wall Fixing Plate x2

⑧ Screw （M4*8） x 8

⑨ Box fixing plate x4

⑩ Screws（M4*12 ）x 8

⑪ movable handle x2

⑫ Expansion screws（M6*100）x2

⑬ Operating Manual x1

3.2. GB-LM4.0 battery package

① GB-LM4.0 x1

② Box fixing plate x4

③ Screw（M4*12 ）x 8

GB-LBS and GB-L Base package	
①	High voltage control box **(**GB-LBS **x1**)
②	Battery base (GB-L Base **x1**)
③	2meters communication cable (ECOM Cable2.0 **x1**)
④	2meters PE cable (PE Cable2.0 **x1**)
⑤	2meters positive power cable (EP Cable2.0 **x1**)
⑥	2meters Negative power cable (EN Cable2.0 **x1**)
⑦	Wall Fixing Plate **x2**
⑧	Screw to fix ⑦ on GB-LBS (M4*8) **x 8**
⑨	Fix the upper and lower boxes (Box fixing plate **x4**)
⑩	Screws to fix ⑨ on two boxes (M4*12) **x 8**
⑪	Move the battery box (movable handle **x2**)
⑫	Expansion screws to fix ⑦ on wall (M6*100) **x2**
⑬	Operating Manual **x1**
GB-LM4.0 package	
①	Battery module (GB-LM4.0 **x1**)
②	Fix the upper and lower boxes (Box fixing plate **x4)**
③	Screws to fix ② on two boxes （M4*12） **x 8**

4. BATTERY SYSTEM INTRODUCTION

The Battery System GB-L is used as a connected battery for the intermediate storage of excess PV energy in an inverter system.

A	Operating Panel 1
B	GB-LBS (high voltage control box)
C	HMI
D	LED
E	GB-LM4.0 (battery module)
F	GB-L Base（battery base）
G	Operating Panel 2

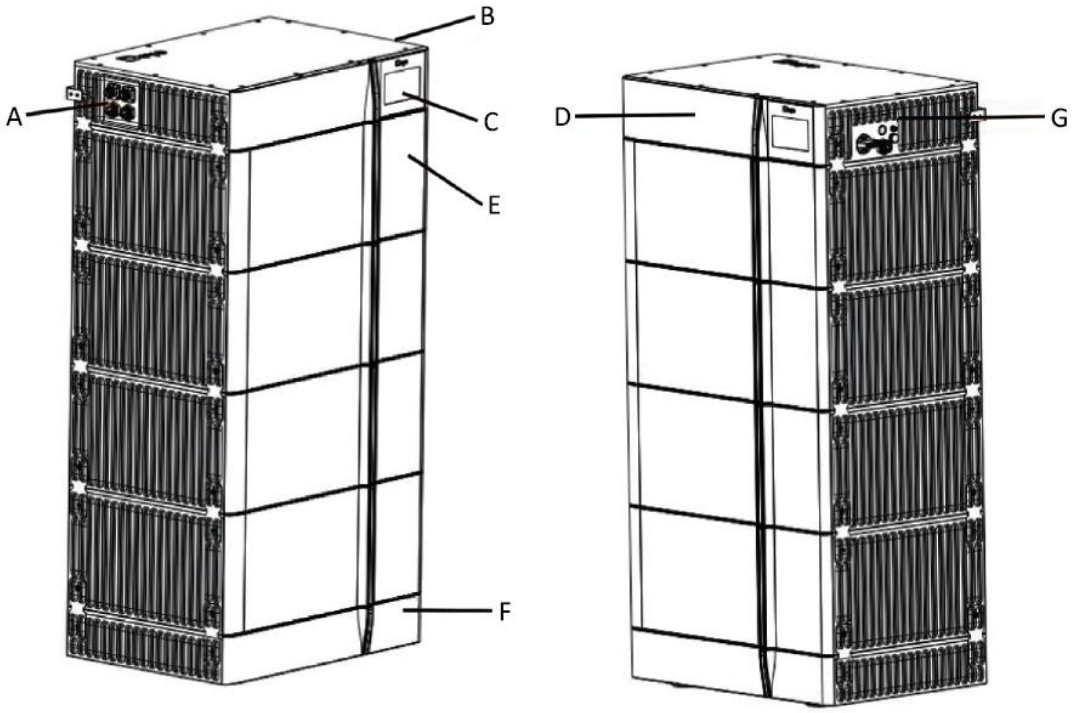

4.1 Operating Panel

1）Operating Panel 1 interview

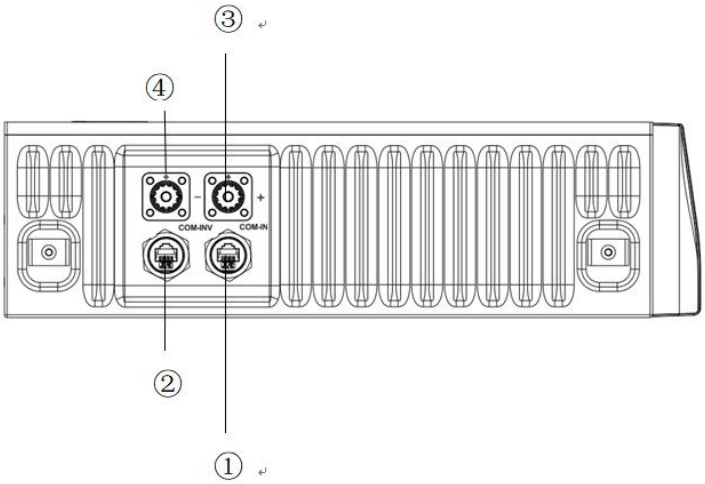

No.	Name	Description
①	COM IN	Connection position of battery module
②	COM INV	Connection position of inverter
③	B+	Battery module positive pole (orange)
④	B-	Battery module negative pole (black)

2）Operating Panel 2 interview

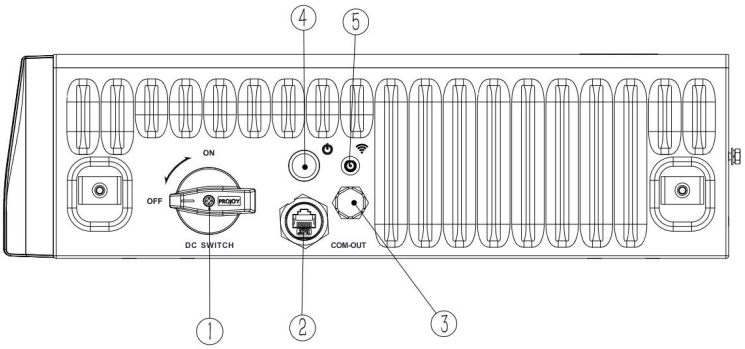

No.	Name	Description
①	DC SWITCH	High Voltage DC switch
②	COM OUT	Connection position of battery module
③	safety valve	/
④	LED Button	Low Voltage DC Switch
⑤	WIFI	WIFI Connection（optional）

4.2 Number of battery modules supported by GB-L

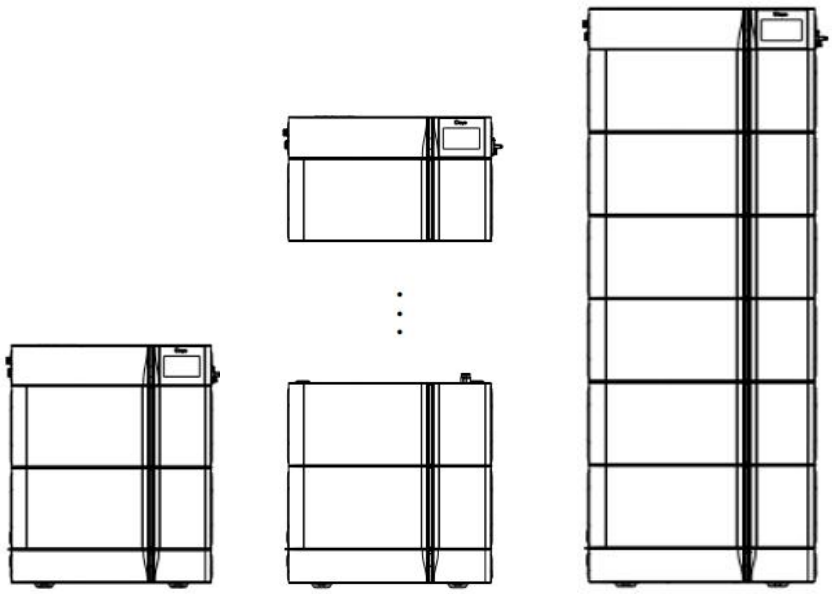

2 modules **2 modules≤N≤6 modules** **6 modules**

Note: Minimum two battery modules are required and Maximum Six modules in one parallel.

5.INSTALLATION

5.1. Installation Place Requirement

① Installed on the surface with enough dryness, horizontal and flat, and has sufficient carrying capacity. (For example, concrete or masonry).

② The altitude of the installation location must not be higher than 2000 meters. (The output power of the battery will decrease with the height of the altitude).

③ If in the flood area, you must pay attention to ensure that the battery is installed in an appropriate altitude to prevent contact with water.

④ Ensure there is no fire source, and it must be equipped with an independent fire alarm device.

⑤ Cannot be exposed to corrosive environments.

⑥ The working temperature range should be -20 ℃ to 60 ℃.

⑦ The maximum environment humidity is 90%.

⑧ Can't be exposed to the sun or beside the heat source directly.

⑨ The installation site must be away from the children and the old.

⑩ The installation position must be compatible with the weight and size of the battery.

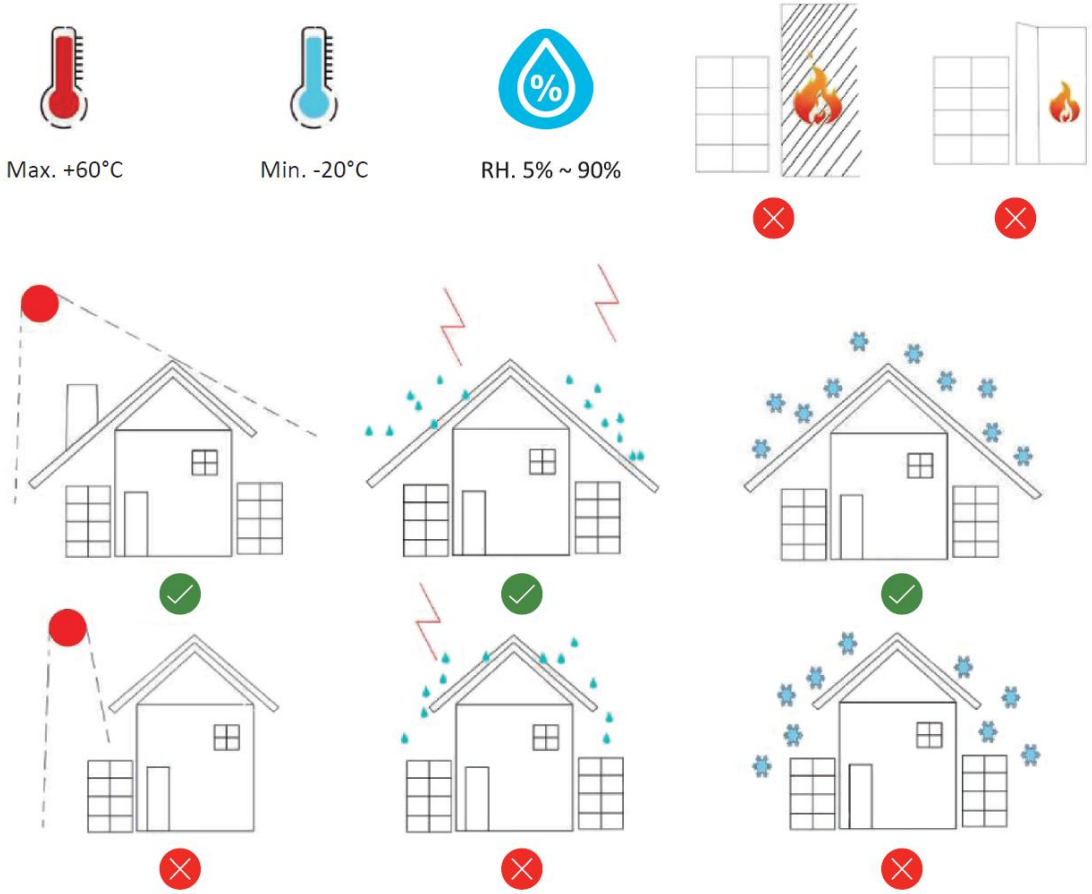

5.2 Tools Requirements:

1. When installing the battery system, wear the following safety equipment.

Gloves Goggles Safety Shoes

2. To install the battery system, you need the following tools

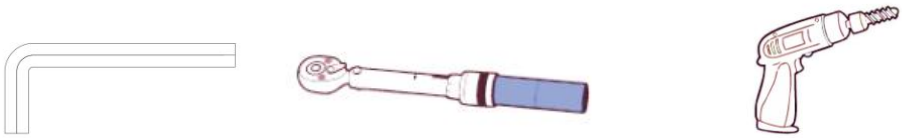

① socket head wrench ② External hexagonal wrench ③electric drill

ATTENTION!

• Because the DC cable or connector on the battery system may cause electric shock or life threatening, do not contact the end of the non-insulating cable.

• If the battery module incorrectly lifts or falls in the process of transportation or installation, it may cause the risk of injury due to the weight of the battery module.

• Carefully transport and lift the battery module. Consider the weight of the battery module.

• For those who work for the battery system, please wear qualified personal protection equipment.

Note: Before the battery is installed, please switch off the Switch on the high Voltage Control Box.

Note: Wear gloves, goggles and safety shoes before installation.

5.3 Installation steps

CAUTION!

① Before installation, please make sure to wear the safety shoes to prevent foot injury.

② The weight of a battery module is over 30kg. Please use the movable tool with two workers to complete stacking work.

③ Do not use the movable handle tool to carry the battery module when the distance is≥10m.

④ Before using the transport tools, check whether they are reliable.

⑤ The installation humidity ranges from 5% to 90%

5.3.1 Product Installation Steps

① Take out the base and battery module. Place the base on hard floor, lift the battery module on top of the base using a movable handle tool.

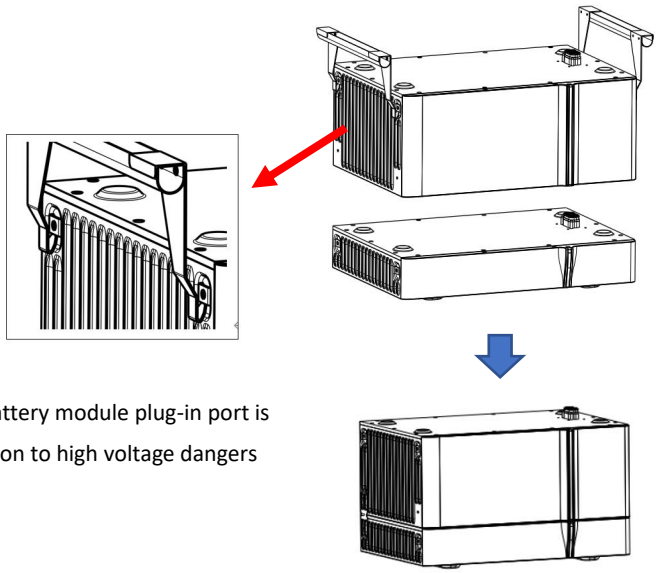

CAUTION!

After the battery module is connected to the base, the battery module plug-in port is electriferous. Take good insulation protection, pay attention to high voltage dangers and shot circuit dangers!

② Stack the corresponding connection ports at the bottom of the battery module. The number of stackable battery modules for a single battery system ranges from 2 to 6.

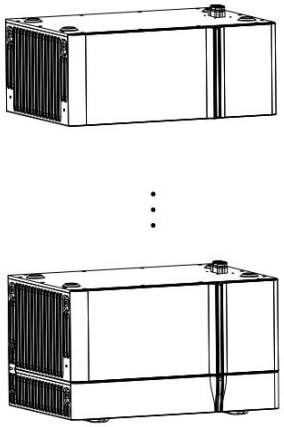

③ Take out the high voltage box, and install the wall fixing plate on the pre-mounting hole of the high voltage box with M4*8 screws,

④ Finally, install the high voltage box to the top layer of the battery module.

⑤ Use M4*12 hex socket screws to install the box fixing plate between the base and the battery module, between the battery modules, between the battery module and the high voltage box as well.

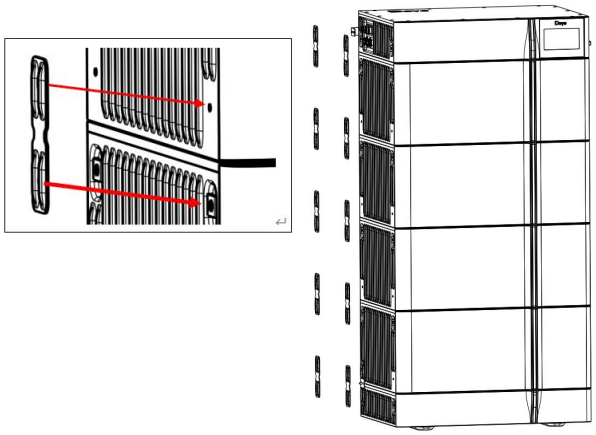

⑥ Place the high voltage box on one side of the wall, mark the positions of fixing holes, drill two holes in the wall with a depth of 100-110mm using the electrical drill, secure the high voltage box to the wall and install expansion bolts in the holes with a proper hammer.

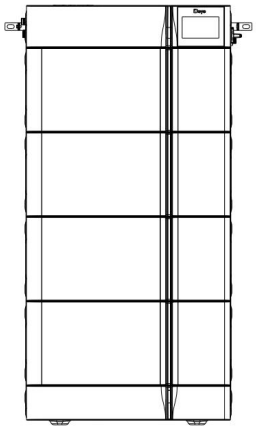

5.3.2 Selection of installation sites

The installation location is recommended to meet the size requirements of the figure below：

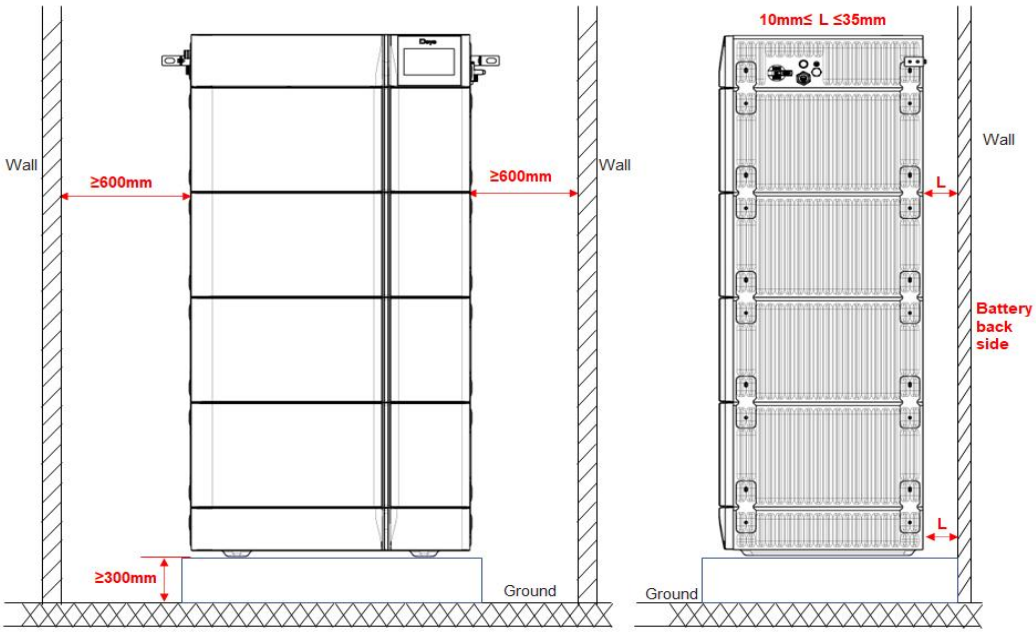

5.4 Definition of Interface

Port definition of Com inv	Port definition of COM IN		Port definition of COM OUT	
485B-	1	BMS_CANL	1	BMS_CANL
485A+	2	BMS_CANH	2	BMS_CANH
	3	DI+	3	DO2+
PCANH	4	DI-	4	DO-
PCANL	5		5	
	6		6	
485A+	7		7	
485B-	8		8	

5.5 Batteries in parallel

CAUTION!

① The length of the power cables between the combiner box and the inverter should be same.

② If the DEYE combiner box is not used, the parallel connection device should meet the following requirements.

a) No less than IP 55 for the outdoor use.

b) Maximum Operating Voltage,1000V DC

c) Maximum Output Current,50A DC

d) Breaking Current, 50A DC.

③ The total power cable length between each battery cluster and the inverter should be less than 20 meters.

5.5.1 Single Battery System

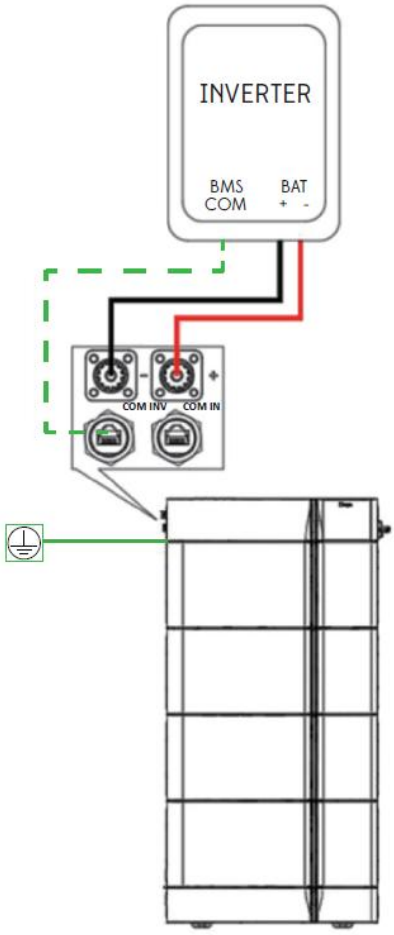

5.5.2 Multiple Battery System

If multiple battery modules need to be connected in parallel, please refer to the following figure.

After single cluster battery modules are connected, takes positive and negative connection cables from each cluster battery's high voltage box connect to the external junction box.

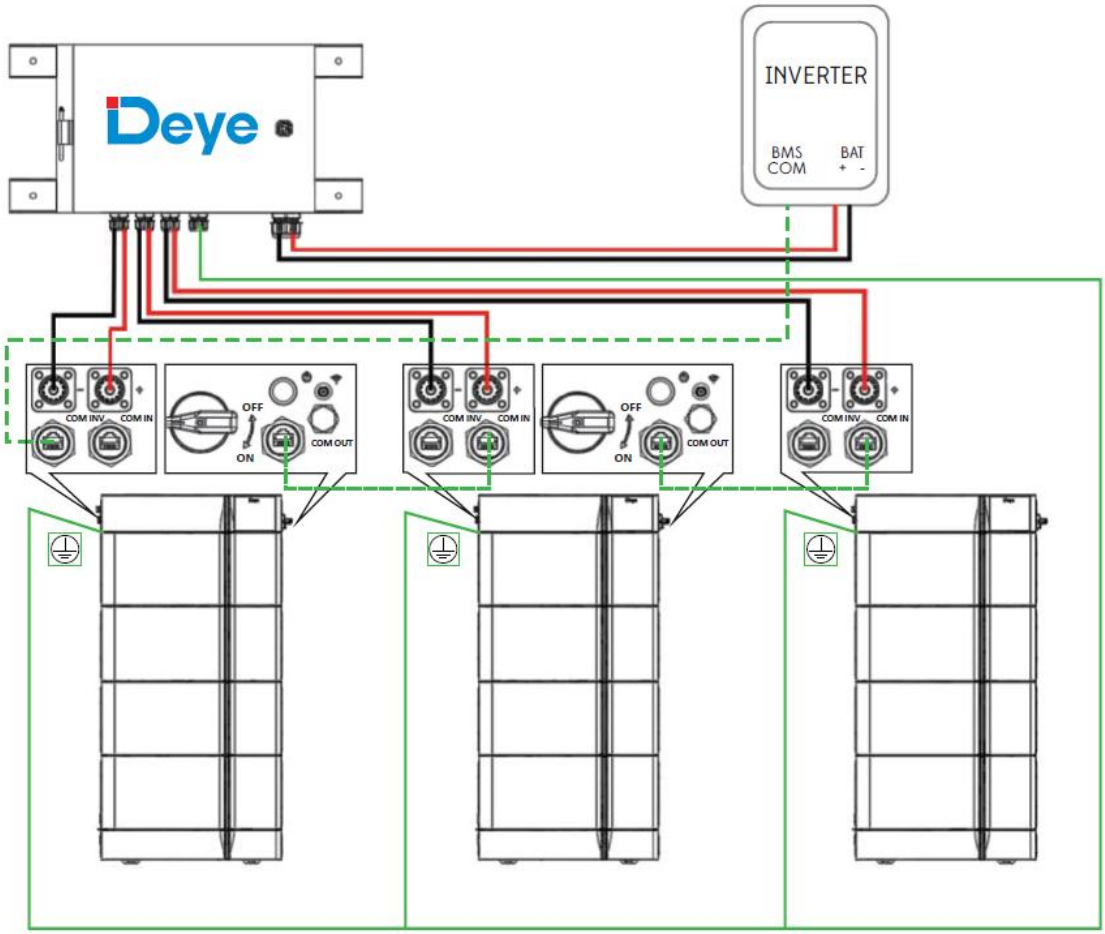

Note:

① The maximum number of battery clusters shall not exceed 16.

② Before verifying that the battery system is fully connected, ensure that all battery switches are off.

6. COMMISSIONING

6.1 Switch on the Battery System

Requirements:

•The battery and the inverter must be properly installed and fixed。

•All cables must be correctly connected.

•Before commissioning, refer to 7.1 chapter Configuring Battery Packs.

Steps:

① Turn the external protection switch between the high voltage box and the inverter from OFF to ON.

② Turn the high voltage isolation switch of the high voltage box from OFF to ON.

③ Turn the low voltage button switch of the high voltage box from OFF to ON.

④ After startup, the system enters the self-check mode, the color belt is light-blue breathing light. After the self-check, the light-blue breathing light changes to blue and the battery system starts to work properly.

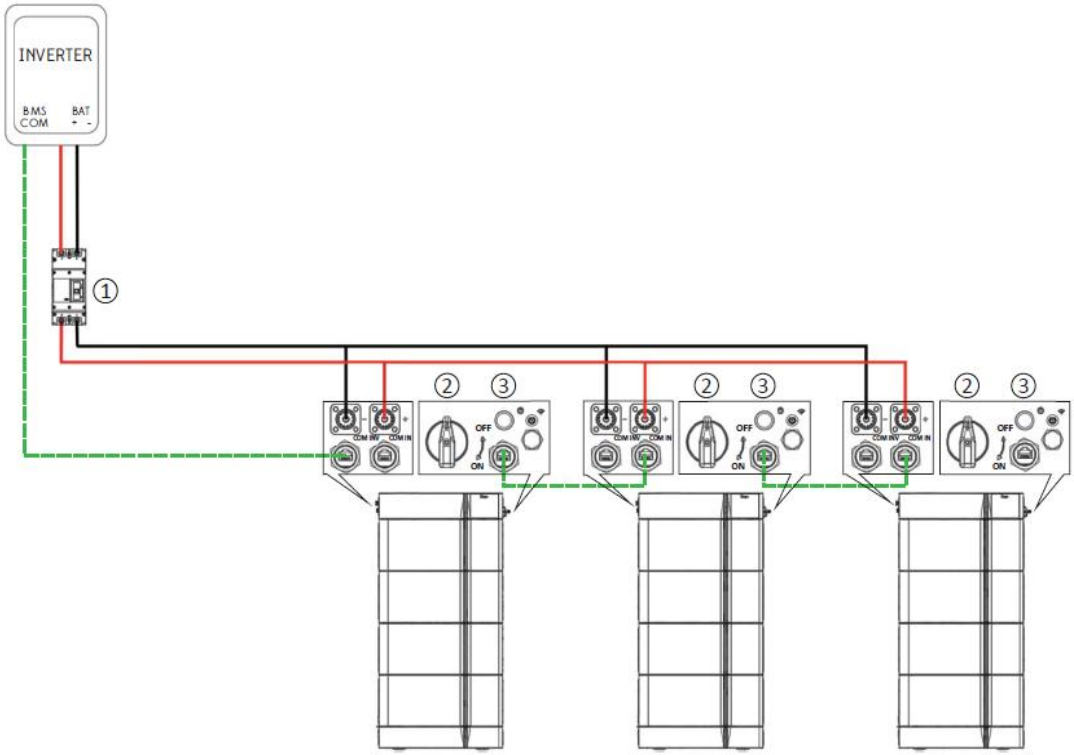

If it is failed to switch on the battery system. **CONTACT OUR LOCAL AFTER-SALE SERVICE WITHIN 48 HOURS.**

6.2 Light meaning

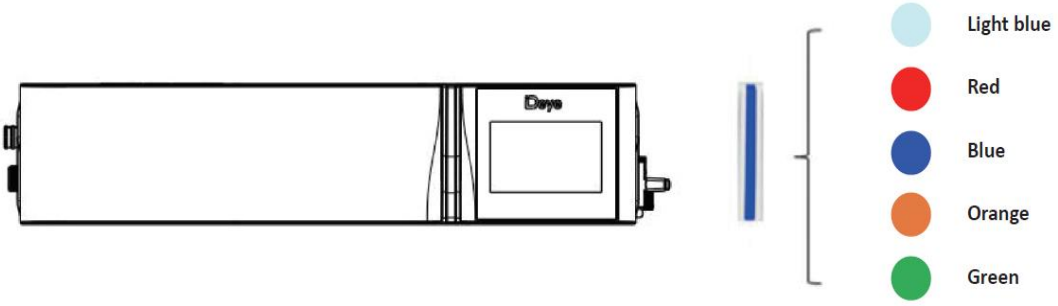

Self-check	Light-blue light, breathing at normal rate If the duration exceeds 1 minute, restart the battery or contact maintenance personnel.
Fault	the red light is steady on when the system in fails
Normal	The blue light is steady on by default. If inverter communication not available, the light switches to the breathing mode.
Alarm	Orange light, the light is always on when the insulation alarm is triggered.
Charging	Green light, breathing at normal rate.
Note:	If single battery cell under voltage alarm or battery pack under voltage alarm is triggered, The light will flash at slow rate with orange color.If one single battery cell voltage is between 2.3V and OV,the light will be turn off and turn on again when SOC is above15%.

In addition to the LED lights, the battery fault information can be obtained through the screen and the master device. DEYE can also read these information through remote WLAN connection.

6.3. Switch off the Battery System

Steps:

① Turn the low voltage switch of the high voltage box from ON to OFF, and wait for 2 seconds until the blue button light goes off.

② Turn the high voltage isolation switch of the high voltage box from ON to OFF.

③ Turn the external protection switch between the high voltage box and the inverter from ON to OFF

If two or three battery systems are connected in parallel, please firstly switch off the first battery which has a communication connection to the inverter, and then switch off all the other batteries.

7. SAFETY DESIGN

1.The battery system cannot be turned on if the battery is incomplete or is not installed properly.

2.The system will automatically shut down if the battery does not communicate with the inverter for 24 hours.

3.The system will automatically shut down if the battery or inverter installation error occurs for 10 minutes.

4.The system will automatically shut down if the voltage is too low within 60 seconds.

7.1 Procedure for configuring battery packs

Steps:

① After connecting the battery cables, The isolate switch button on the high-voltage control box to turn OFF to ON.

② Press the start button and wait for the screen to light up.

③ Click the icon on screen to enter the maintenance system password confirmation interface.

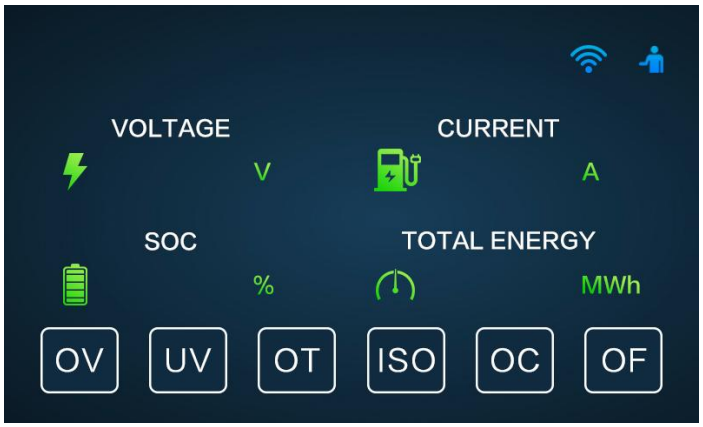

④ Enter the password 123 and press the Confirm key to enter the main interface of system maintenance. The operation shall be performed by a professional.

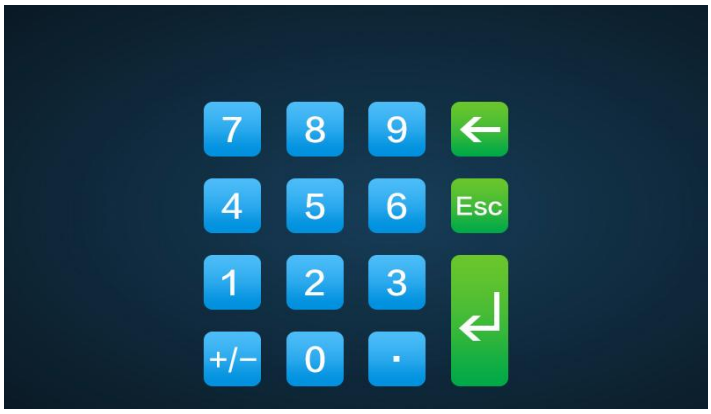

⑤ Click “BMU No” in the lower left corner, enter the number of battery packs in system and click “OK” to finish configuring the number of battery packs.

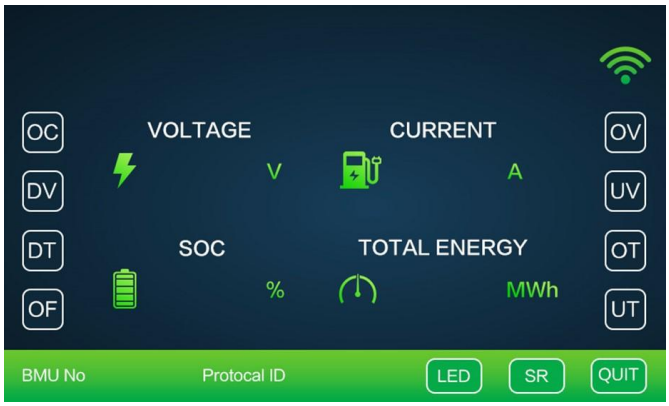

⑥ After the setting is successful, you need to restart.

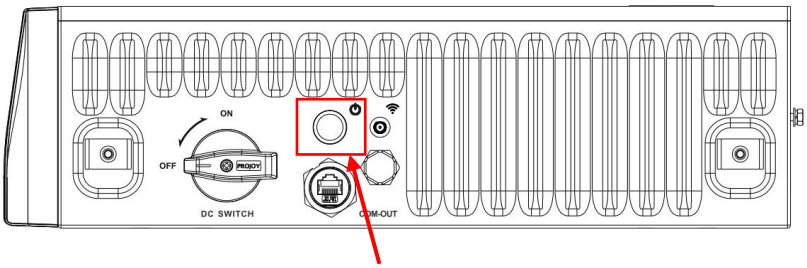

7.1.1. Basic Parameters

Wi-Fi Icon	• No Wi-Fi icon on the screen indicates no Wi-Fi signal. • The flashing Wi-Fi icon on the screen indicates the Wi-Fi is in connecting. • The Wi-Fi icon on the screen indicates the Wi-Fi is connected.
System maintenance icon	Click this icon to enter the system maintenance interface.
Voltage	Total battery voltage
Current	Battery current, the positive value representing discharging, the negative value representing charging
SOC	Percentage of battery remaining energy
Total energy	Accumulated discharging energy

7.1.2. Fault Indication:

When the corresponding fault type occurs, the red background indicator on the screen will light up. Refer to 6.2 for details.

OV	Over voltage
UV	Under voltage
OT	Over temperature
ISO	Insulation failure, there is a risk of leakage current
OC	Charging over current
OF	Other faults

In addition：

1. If the communication between the battery and the inverter is not connected, the breathing light will be light-blue. Please check the communication between the inverter and battery first.
2. When the battery system starts, the breathing light belt is light blue and breathing flashes, and the battery system is in the state of self-check. If the light blue color remains for a long time ≥15s, the system is in an abnormal state and cannot work.
3.When the red light is on, it indicates that the battery system is faulty. You can check the faulty information on the screen.
4. The battery system can repair the fault within a certain time itself; If the fault cannot be rectified, restart the battery. If the fault still exists after restart, contact after-service or technical support.

8. MAINTENANCE AND STORAGE

8.1 Cleaning

We recommend to clean the battery system regularly. If the battery housing is dirty, use a soft dry brush or dust collector to remove the dust. Do not use solvents, abrasives, or corrosive liquids to clean the housing.

8.2 Storage

If the battery energy storage system will not be used for a long time, please refer to the following table to save the power. After charging, turn off all switches on the battery energy storage system to ensure the lowest system power consumption.

Storage environment temperature	**Relative humidity of the storage environment**	**Storage time**	**SOC**
Below-10℃	/	Not allowed	/
-10-25℃	5%-70%	≤6 months	25%≤SOC≤60%

25-35℃	5%-70%	≤6 months	25%≤SOC≤60%
35-50℃	5%-70%	≤3 months	25%≤SOC≤60%
Above 50℃	/	Not allowed	/

Note: To ensure the battery service life, keep the storage temperature of the battery module between 0°C and 35°C

9. DISPOSAL

For details related to the disposal of battery modules, please contact us. Service Hotline: +86 0574 8612 0560, Email: service-ess@deye.com.cn. For more information, please visit http://deyeess.com.

Observe applicable regulations on waste battery disposal. Immediately stop the use of damaged batteries. Please contact your installer or sales partner before disposal. Ensure that the battery is not exposed to moisture or direct sunlight.

Attention:

1. Do not dispose of batteries and rechargeable batteries as domestic waste!

You are legally obliged to return used batteries and rechargeable batteries.

2. Waste batteries may contain pollutants that can damage the environment or your health if improperly stored or handled.

3. Batteries also contain iron, lithium and other important raw materials, which can be recycled.